DC Inverter Heat Pump

Instruction Manual

For models: GT-SKR080KBDC-M32T

- Please read the manual carefully before installation and maintenance.
- Please keep this manual well for future reference.

CONTENTS

Part I: Important safety instruction 1
1.1 Warnings 1
1.2 Important safety instruction 1
Part II Installation 3
2.1 Transportation 3
2.2 Installation site requirement 3
2.3 Minimum distance to wall 3
2.4 Clearance between outdoor module and ground 4
2.5 Installation guide 5
2.6 Recommended hydraulic connection 6
2.7 Electrical connection 7
2.8 Trial operation 7
Part III Control System 9
3.1 Controller position 9
3.2 Controller introduction ..... 错误!未定义书签。
3.3 Operation introduction ..... 错误!未定义书签。
Part IV Maintenance ..... 错误!未定义书签。
Part V Trouble Shooting ..... 错误!未定义书签。
Part VI Wiring Diagram 9
Disposal 34

Part I: Important safety instruction

1.1 Warnings

Read the manual carefully before using the product.

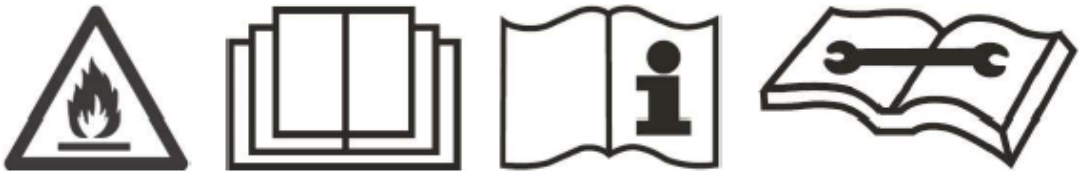

Warnings on the refrigerant

The refrigerant used is R32 fluoride. R32 refrigerant is flammable and odorless. In addition, it can cause explosion in particular conditions. However, its flammability is very low. In order to start the flame, a free flame is required.

R32 refrigerant is a less polluting refrigerant than other gases used in refrigeration circuits and causes much less damage to the ozone layer. The influence on the greenhouse effect is also much lower.

The R32 refrigerant has excellent thermodynamic characteristics, which allows a really high energy efficiency. For the same heating capacity, the system therefore needs a lower charge.

1.2 Important safety instruction

1. The unit can be used by children aged from 8 years and above and persons with reduced physical, sensory or mental capabilities or lack of experience and knowledge if they have been given supervision or instruction concerning use of the unit in a safe way and understand the hazards involved. Children shall not play with the unit. Cleaning and user maintenance shall not be made by children without supervision.

2. The unit must be installed and repaired by qualified technician.

3. The unit shall be installed in accordance with national wiring regulations.

4. If the supply cord is damaged, it must be replaced by the manufacturer, its service agent or similarly qualified persons in order to avoid a hazard.

5. Before maintenance, please shut off the power to the unit first.

6. Do not operate the unit in a wet room such as a bathroom or laundry room.

7. Before obtaining access to terminals, all supply circuits must be disconnected.

8. An all-pole disconnection device which has at least 3mm clearances in all poles, and have a leakage current that may exceed 10mA, the residual current device (RCD) having a rated residual operating current not exceeding 30mA, and disconnection must be incorporated in the fixed wiring in accordance with the wiring rules.

9. A leakage protection switch must be installed near the unit.

10. Do not use any damaged cables and switches to avoid any leakage.

11. Do not open the electrical box of the unit without shutting off power supply.

12. The unit is designed for outdoor installation. Do not install it in a closed space without good ventilation.

13. Do not install the unit near inflammable or explosive goods.

14. Do not block the air intake or outlet of the unit.

15. When the unit is in off status for more than 5 hours with the ambient temperature lower than 2℃, please drain the unit to prevent the formulation of ice in it.

16. Keep safety distance between the unit and other equipment or structures according to local norm, and ensure that adequate space for maintenance or service operations.

17. Power supply: the diameter of electrical cables must be suitable for the unit and the power supply voltage must correspond with the value indicated on the units. All units must be earthed in conformity with legislation in force in the country concerned.

18. Please attention that hot water produced by the unit is not to be used for drink.

Part II Installation

2.1 Transportation

Along transportation, don’t incline the unit more than 45°in any direction

The unit in its packaging can be transported with a lift truck or hand truck.

2.2 Installation site requirement

This unit is designed for outdoor installation, do not install it in an close space.

Please consider the condition as following factors when selecting installation site.

- The installation site should be large enough and well ventilation.
- The installation site should be convenient for water drainage.
- Select a smooth, horizontal site where it can support the weight of the unit.
- Do not install the unit where there is pollution, accumulation, fallen leaves or bad ventilation.
- Don’t install the unit near inflammable or explosive goods.

2.3 Minimum distance to wall

Air discharge

Minimum 1000mm to obstacles obstructing the air discharge.

Minimum 3000mm to footpaths and patios due to the formation of ice, even when outside temperatures are above 0 °C

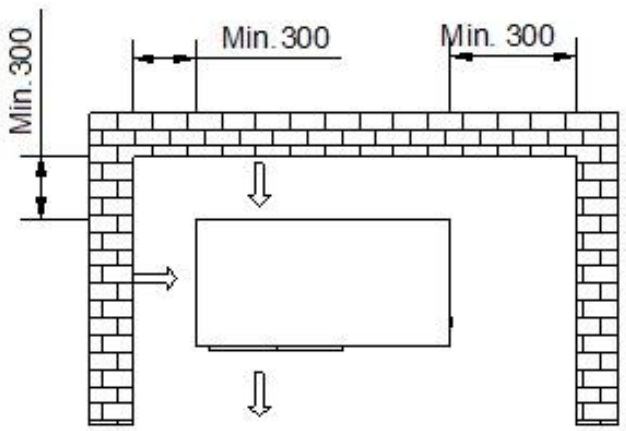

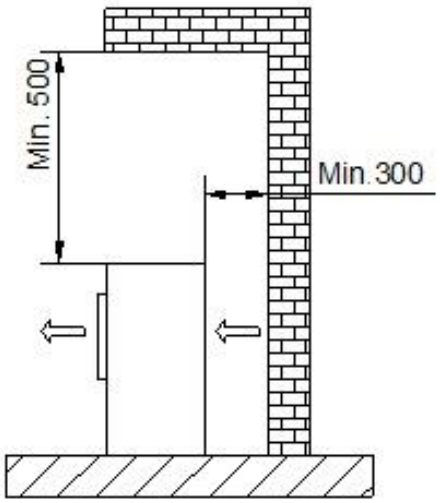

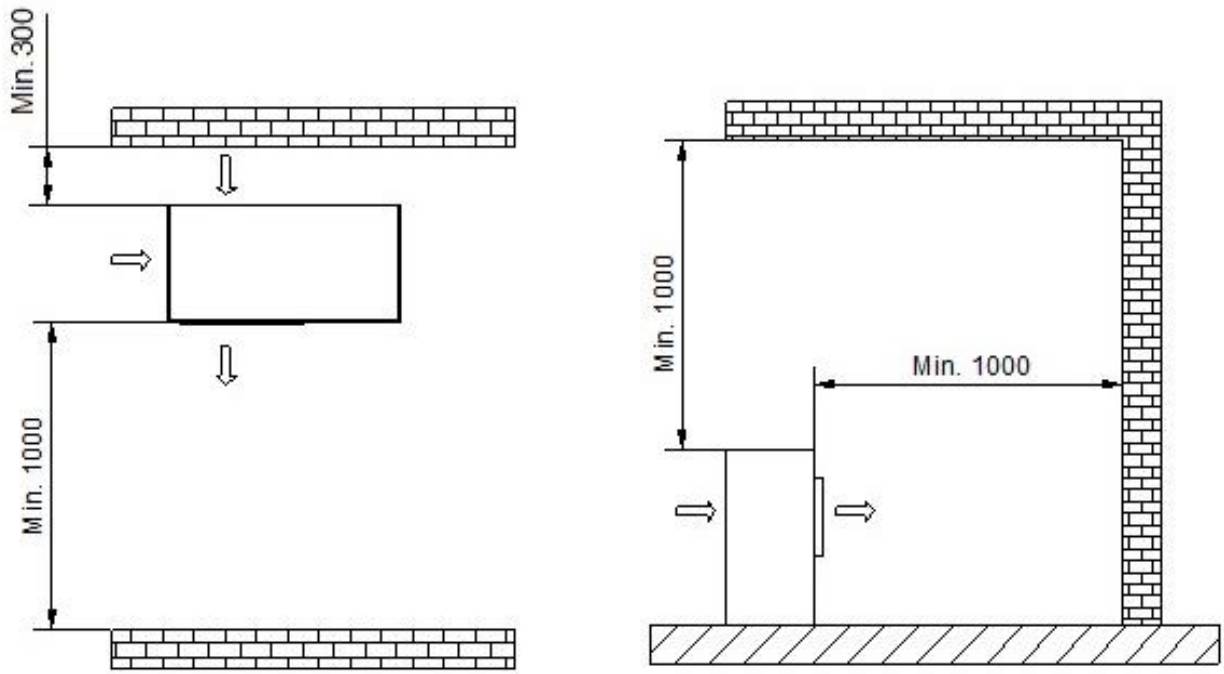

2.4 Clearance between outdoor module and ground

The minimum installation height must be 300mm.

A canopy must be constructed over the outdoor module in areas with heavy snowfall.

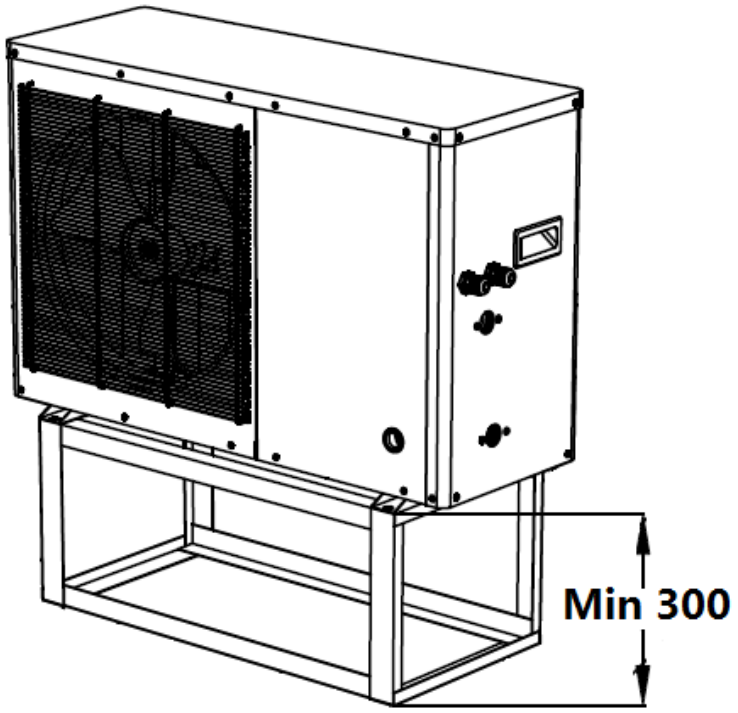

2.5 Installation guide

2.5.1 Installation

a. Install 4 pieces shockproof rubber pad under the feet of the unit.

b. If the unit work with a water tank, the vertical distance between the unit and the water tank should be less than 6m, and the horizontal distance should be less than 20m.

c. Connect the condensate drainage connector to the hole at the bottom sheet.

2.5.2 Accessories

Accessories inside the package as below table

No	Item	Quantity
1	Instruction Manual	1
2	Condensate drainage connector	2
3	shockproof rubber pads	4

2.6 Recommended hydraulic connection

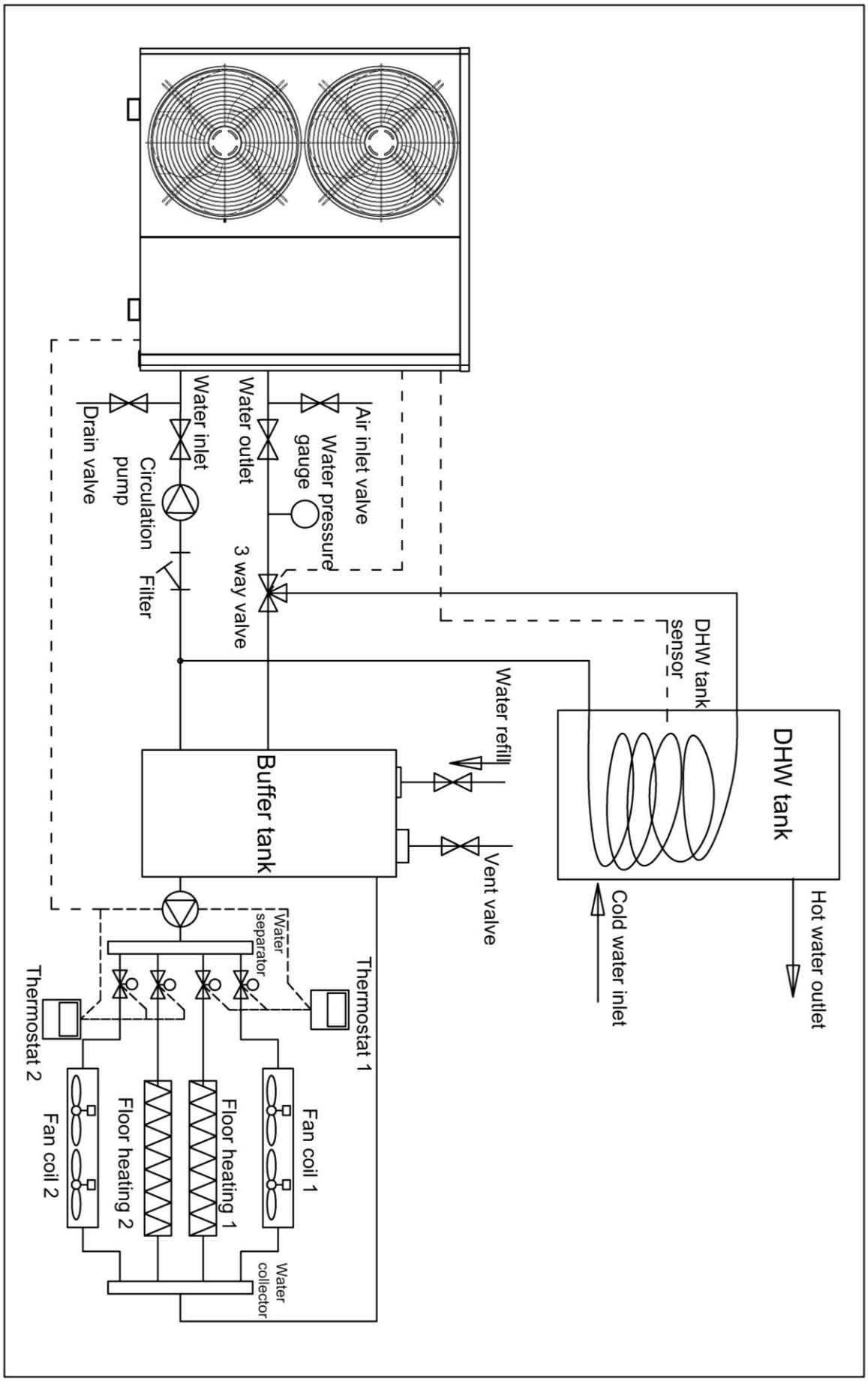

2.7 Electrical connection

1. Ensure proper operation of the unit, the unit must be installed and repaired by qualified technician.

2. A leakage protection switch must be installed near the unit.

3. Do not use any damaged cable and switch.

4. Do not open the electrical box without shutting off all power to the unit.

- All the wiring must meet the local electrical safety norm and performed by qualified electricians.
- Ensure that the heat pump water heater is well connected to the earth, do not disconnect the earth connection of the power in any condition.
- Provide a separate power supply which meets rated requirements for the unit.
- When the unit connects to the electricity network, there must be a short-circuit protection.
- Choose the suitable cable when use the power outdoor.
- Do not control the unit on or off by the main power switch.
- After finish installation, check before connect the unit to the power.

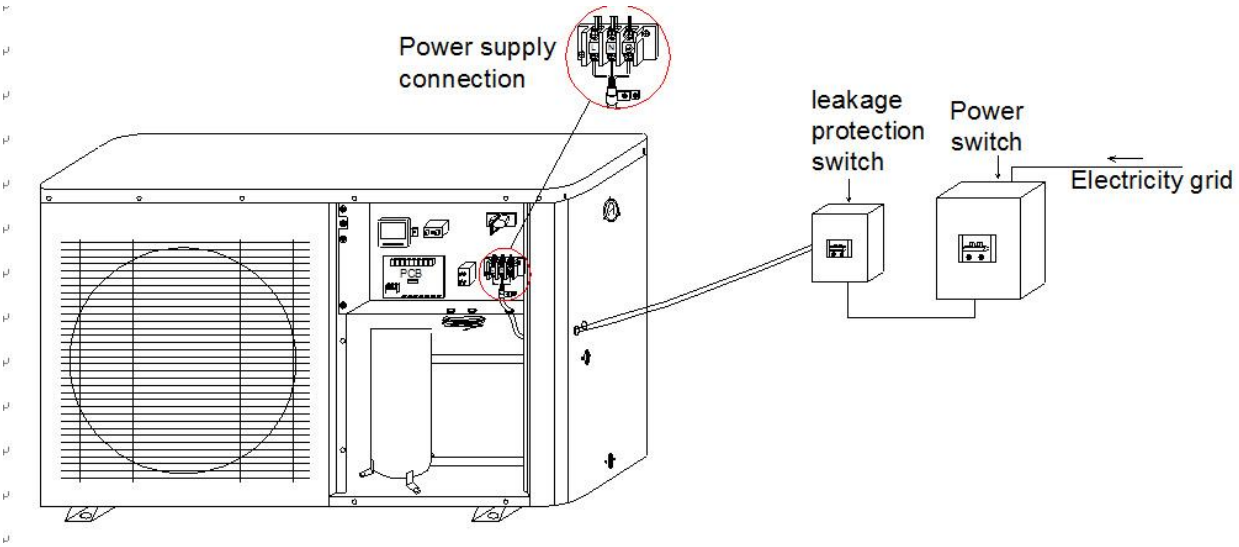

The Specification of Power

Following information is for reference, please subject to the local safety norm.

Type	GT-SKR080KBDC-M32T
Power supply	380-415V/3Ph/50Hz
Circuit Breaker/Fuse(A)	32
Min. power wiring (mm^2)	2.5
Ground wiring (mm^2)	1.5

2.8 Trial operation

- The unit should only be operated by qualified technician.
- Please drain air inside hydraulic system before operation.
- The unit is designed according to the conditions as follows: the range of ambient temperature is -20℃～43℃ and the range of water pressure is 0.15～0.8Mpa.

2.8.1 Preparation

The following items should be checked before startup:

a. The heat pump should be connected completely.

b. All valves that could impair the proper flow of the heating water in the heating circuit must be open.

c. The air intake and air outlet paths must be cleared.

d. The ventilator must turn in the direction indicated by the arrow.

e. The settings of the heat pump controller must be adapted to the heating system in accordance with the controller's operating instructions.

f. Ensure the condensate outflow functions.

g. Drain the air inside hydraulic system.

2.8.2 Trial run

- Turn on the power, start up the unit by the controller, after 30 seconds, the unit (compressor) start to work, then observe whether the unit works normally.
- When you restart the unit, the compressor will start up after three minutes to protect the compressor.

2.8.3 Caution

When following happen during trial operation, please stop the unit immediately and cut off the power and contact with our authorized agent or maintenance technician.

Fuse blown or protection activated frequently

- The wire and switches are heated abnormally
- Abnormal sounds coming from the unit
- Abnormal smell comes out of the unit.
- Electricity leakage.

Part III Control System

3.1 Controller position

The controller is installed inside the unit before factory, open the front panel as following picture, you will find the controller.

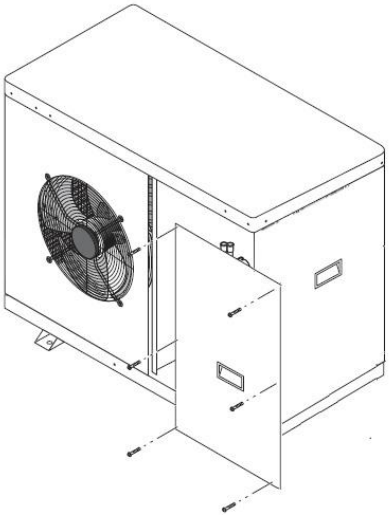

There is 8 meters cable for the controller, it is allowable to move the controller to outside the unit, but avoid a place with sunshine and rain.

3.2 Controller introduction

3.2.1 Operation panel

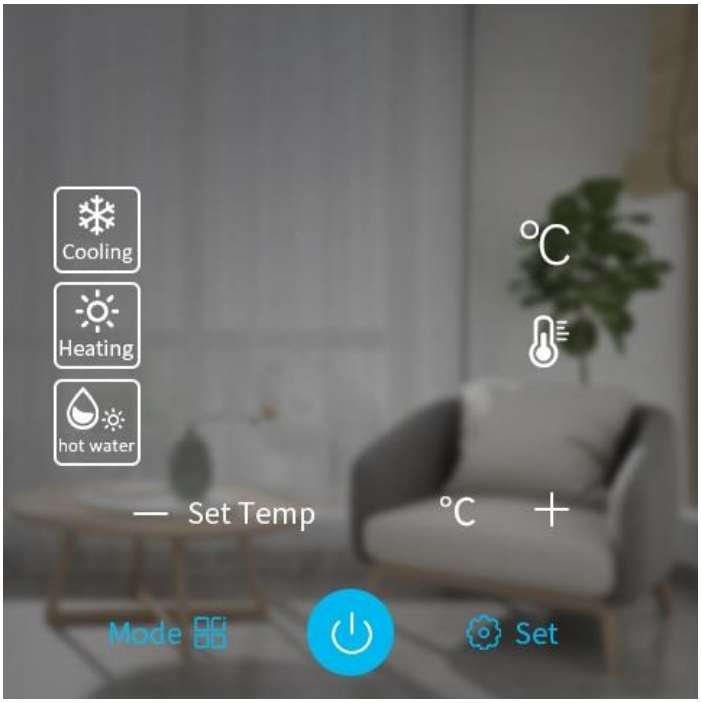

3.2.2 Icon description

No.	Icon name	Icon	Description
1	ON/OFF		Turn on/off the unit
2	FUNCTION	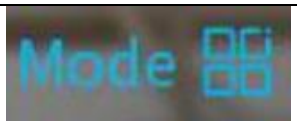	Switch working mode
3	UP		Set temperature up
4	DOWN		Set temperature down
5	SET		Enter setting
6	WORKING PARAMETER SETTING	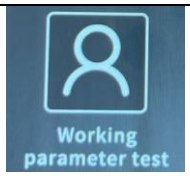	Enter working parameter setting
7	FORCED DEFROSTING		Turn on/off forced defrosting
8	FORCED POWER-ON HEATING		Forced power-on heating
9	CURVE HEATING MODE		Turn on/off curve heating mode
10	RESTORE FACTORY SETTING		Restore factory setting
11	ONLY FOR TECHNICIAN OPERATION		Please keep it in off status

12	CAPABILITY TEST		Enter capacity test
13	COMMODITY INSPECTION		Enter commodity inspection
14	SWITCH FAHRENHEIT / CELSIUS		Switch Fahrenheit / Celsius
15	PARAMETER SETTING		Enter parameter setting
16	TIMER SWITCH		Set timer
17	TROUBLESHOOTING		Check error code list
18	REMOTE CONTROLLER INFORMATION		Check controller information
19	PARAMETER QUERY		Parameter query
20	Remove WIFI connection		Remove WIFI connection

Note: After power is on, need to press the power button above the controller to turn on. Slide to unlock after locking.

1. ON/OFF

In unlock status, click icon to turn on/off the unit.

2. FUNCTION

In main menu, click icon

to switch working mode.

3. UP/DOWN

Click icon or to adjust the set temperature of the current mode.

4. SET

Click icon

to enter parameter and other settings.

5. TIME

Click the time in upper left corner of the screen, and enter the current time, click OK to confirm.

3.2.3 Working parameter setting

In set menu, click icon 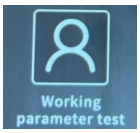

to enter working parameter setting.

❖ **Force defrosting**

In working parameter setting menu, click icon

to turn on/off forced defrosting.

❖ **Force power-on heating**

In working parameter setting menu, click icon

to forced power-on heating.

❖ **Curve heating mode**

In working parameter setting menu, click icon

to turn on/off curve heating mode.

In curve heating mode, the unit runs according to heating curve.

The heating curve is the relationship between the heating system supply temperature and the outside air

temperature. In the case of a heating curve, it is done automatically thanks to the weather-based control, which adjusts the supply temperature based on the outside temperature.

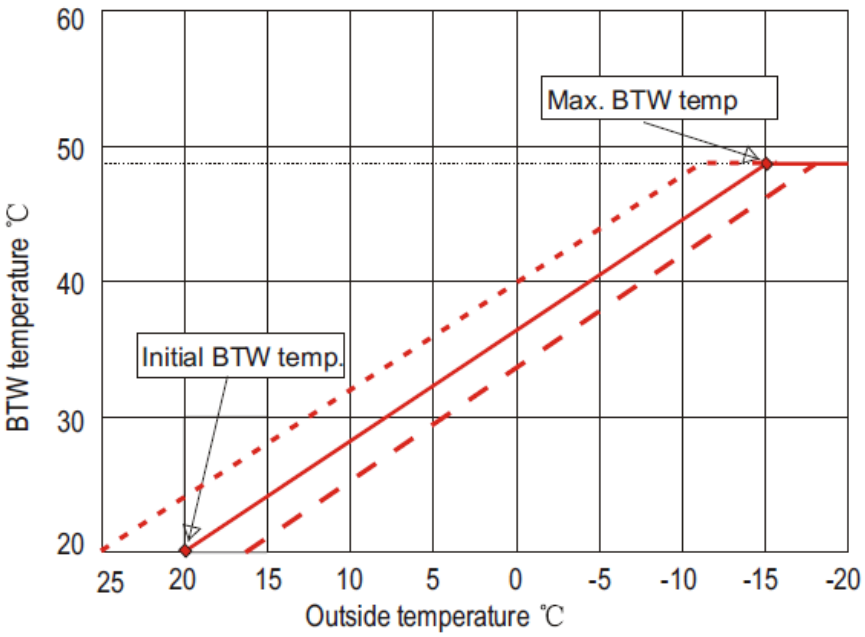

Item	Description	Default value	Unit	Range
b17	Set room temp	25	℃	15~25℃
b18	Initial BTW temp	20	℃	15~25℃
b19	Max. BTW temp	43	℃	24~50℃

Target buffer tank temp = Initial BTW temp + (Max BTM temp - Initial BTW temp) / 35 x (Set room temp - Outside temp)

For example, Set room temp = 25° C, Max BTW temp = 43° C, Initial BTW temp = 20° C

a. When outside temp=20° C, Target buffer tank temp = 20+(43-20)/35x(25-20)=23° C

b. When outside temp=0° C, Target buffer tank temp = 20+(43-20)/35x(25-0)=36° C

c. When outside temp=-15° C, Target buffer tank temp = 20+(43-20)/35x(25+15)=46° C

When Air temperature sensor failure, in OFF status, in DHW mode, and in cooling mode, the unit doesn't run according to heating curve.

When the unit is working in ECO mode, it only works according to the heating curve, can't set temperature by controller or App.

❖ Restore factory setting

In working parameter setting menu, click icon

to restore factory setting.

❖ **Capability test**

In working parameter setting menu, click icon

to enter capability test mode.

❖ **Commodity inspection**

In working parameter setting menu, click icon

to enter commodity inspection mode.

❖ **Switch Fahrenheit/Celsius**

In working parameter setting menu, click icon

to switch Fahrenheit/Celsius.

❖ **Parameter setting (only for technician operation)**

In working parameter setting menu, click icon

, enter password 6666 to enter parameter setting.

Item	Description	Default value	Unit	Range	Remark
01	Water Temp. Difference for Heating/DHW	3	℃	0~15	
02	Water Temp. Difference for Cooling	3	℃	0~15	
03	Maximum heating water temperature setting	75	℃	20~75	
04	Minimum heating water temperature setting	15	℃	10~20	
05	Maximum cooling water temperature setting	32	℃	20~60	
06	Minimum cooling water temperature setting	8	℃	8~20	
07	Select water circulation pump	0	℃	0~2	0: AC pump 1: APF25=10-130E 2: APF25-12-130E
08	Circulation Pump operation Mode	2		0~2	0: Run 2 min. every b09 min. 1: Run as compressor run 2: Always run
09	Interval Running interval of	5	min	0~99	

	circulation pump				
10	Water Inlet/ outlet temperature difference protection	40	℃	5~40	
11	Operation Mode	1		0~3	0: heating 1: heating + DHW 2: heating + cooling 3: heating + cooling + DHW After setting, it needs to be powered off to take effect.
12	Power failure memory	1		0~1	0: off 1: on
13	Ambient Temp. to start E-heater	-15		-30~20	
14	Ambient Temp. to start EVI	8		0~10	
15	Fan motor type	0		0~3	0: DC 1: single speed 2: double speed 3: three speed Power off is required after setting up to take effect.
16	Temperature compensation	1		0~1	0: no 1: yes
17	Translation temp. of heating Curve	25	℃	15~25	
18	Starting Temp. of heating curve	20	℃	15~25	
19	Maximum temp. of heating curve	43	℃	24~50	
20	Continuous Time Compensation for Defrosting Condition 1	0	min	-30～50	
21	Continuous Time Compensation for Defrosting Condition 2	0	min	-30～50	
22	Coil Temp. 1 of entering defrosting	0	℃	-30～30	
23	Coil Temp. 1 of entering defrosting	0	℃	-30～30	
24	Maximum defrosting time setting	12	min	6～16	
25	Coil Temp. 1 of exit defrosting	EE	℃	12～25	
26	Coil Temp. 1 of exit defrosting	5	℃	4～11	
27	Anti-legionella Cycle	144	h	0~9999	When set to 0, this function is not available

28	Water temp. of anti-legionella	70	℃	1~99	
29	Maximum DHW setting	55	℃		
30	Target exhaust superheat for main EEV in heating	EE	℃	0~10	
31	Target exhaust superheat for main EEV in cooling	EE	℃	0~10	
32	Main EEV adjustment interval	EE	s	30~90	
33	Minimum main EEV opening in cooling	EE	P	50~480	
34	Minimum main EEV opening in heating	EE	P	50~480	
35	Main EEV's target superheat for heating	EE	℃	0~10	
36	Main EEV's target superheat for Cooling	EE	℃	0~10	
37	Spare	0			
38	Target superheat for EVI	EE	℃	0~15	
39	EVI EEV adjustment interval	EE	s	30~90	
40	Spare				
41	Spare				
42	Low fan motor speed	EE		200~1000	
43	Medium fan motor speed	EE		200~1000	
44	High fan motor speed	EE		200~1000	
45	Maximum operation outdoor temperature setting in heating	55	℃	10~60	
46	Minimum operation outdoor temperature setting in heating	-25	℃	-35~10	
47	Spare	0			
48	spare	0		1~13	
49	Spare	0		1~13	
50	Spare	0		1~10	
51	Spare	0		1~10	
52	Spare	0		0~1	
53	Spare	0	℃	0~5	
54	Spare	0			
55	Cascade quantities	1		1~8	
56	Select cascade unit to display	1		1~8	
57	Spare	0			
58	Spare	0			

59	Spare	0			cure
60	Adjust frequency and EEV opening manual on/off	0		0~1	0: off 1: on
61	Adjust frequency opening manual	60	HZ	0~95	Default value is current running frequency
62	Manual adjust main EEV opening	300	HZ	0~480	Default value is current running frequency
63	Manual adjust EVI EEV opening	100	P	0~480	Default value is current running frequency
64	DC fan motor speed	850	P	400~1000	Default value is current running frequency
65	Spare				
66	Spare				
67	Spare				
68	Spare				
69	Controlled by city power grid or not	0		0-1	0: Uncontrolled 1: Controlled
70	During peak electricity demand, the allowable heat pump operating time can be set after stop running 2 hours	60	min	3~240	
71	Setting temperature in DHW mode during free electricity	54	℃	20~55	
72	Setting temperature of heating mode during free electricity	72	℃	15~75	
73	Manual control of DC water circulation pump or not	0		0-1	0: automatically 1: manual
74	Set water flow of circulation pump manual		m3/h	0-50	The prerequisite is to set B07=1 or 2

❖ Timer switch

In set menu, click icon

to set timer. After setting the timer on/off time, select the timer.

❖ Check error code list

In set menu, click icon

to check error code list.

❖ **Remote controller information**

In set menu, click icon

to check controller information.

❖ **Parameter query**

In set menu, click icon

to enter parameter query.

Item	Description	Unit	Range	Remark
C0	DHW temperature	℃	-30～105	
C1	Compressor frequency	Hz	-30～105	
C2	Compressor Phase Current	A	-30～105	
C3	DC Bus Voltage	V	-30～105	*10
C4	IPM Module Temperature	℃	-30～105	
C5	ACVoltage	V	-30～105	*10
C6	AC Current	A	-30～105	
C7	Compressor power Input	W	-30～105	*100
C8	Fan Motor Speed	RPM	-30～105	*10
C9	Target superheat of main freon system suction	℃	-30～105	/10
C10	Actual average superheat of main Freon system suction	℃	-30～105	
C11	Main EEV opening	P	-30～105	*10
C12	EVI EEV opening	P	-30～105	*10
C13	High Pressure	℃	-30～105	*100
C14	Saturation evaporation temperature of high pressure	℃	-30～105	
C15	Superheat temperature of exhaust	℃	-30～105	
C16	Low pressure of main Freon system	Kpa	-30～105	*100
C17	Saturation evaporation temperature of low pressure	℃	-30～105	
C18	EVI superheat temperature (setting)	℃	-30～105	
C19	EVI Superheat temperature (actual)	℃	-30～105	
C20	Low pressure of EVI system	Kpa	-30～105	

C21	EVI inlet temperature	℃	-30～105	Low pressure saturated evaporation temperature
C22	EVI outlet temperature	℃	-30～140	EVI suction temperature
C23	Exhaust temperature	℃	-30～105	
C24	Coil temperature for heating	℃	-30～105	
C25	Outdoor air temperature	℃	-30～105	
C26	Buffer tank temperature	℃	-30～105	
C27	Spare	℃	-30～105	
C28	Water inlet temperature	℃	-30～105	
C29	Water outlet temperature	℃	-30～105	
C30	Suction temperature		0: OFF; 1: ON	
C31	Cascade on/off selection		0: OFF; 1: ON	
C32	Cascade on/off state		0: OFF; 1: ON	
C33	Water circulation pump state			
C34	Fault record 1			
C35	Fault record 2			
C36	Fault record 3			
C37	Fault record 4			
C38	Fault record 5			
C39	Target proportion of water circulation pump			
C40	Actual water flow	m3/h	0-50	*10
C41	Main PCB program verification code			
C42	Main PCB EE verification code			
C43	Control panel verification code			
C44	Inverter program verification code			
C45	Inverter EE verification code			

❖ **WIFI control**

In set menu, press icon

for 3 seconds till “Start distribution network” appears in the upper left corner of the display.

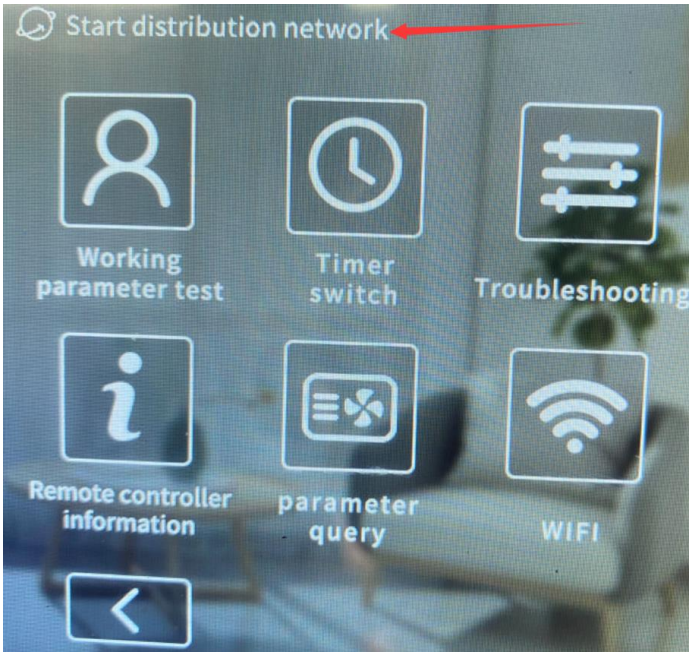

1. Connect the mobile phone to WIFI, turn on the Bluetooth of the mobile phone, and open the Positioning of the mobile phone.

2. Scan the QR code, or search the App of “Smart Life” at the APP Store on mobile phone, download and install the App, will display on your mobile phone.

3. Complete registration step by step if new user.

4. Power on the screen of controller of heat pump, App will automatically discover the device, click “Add”.

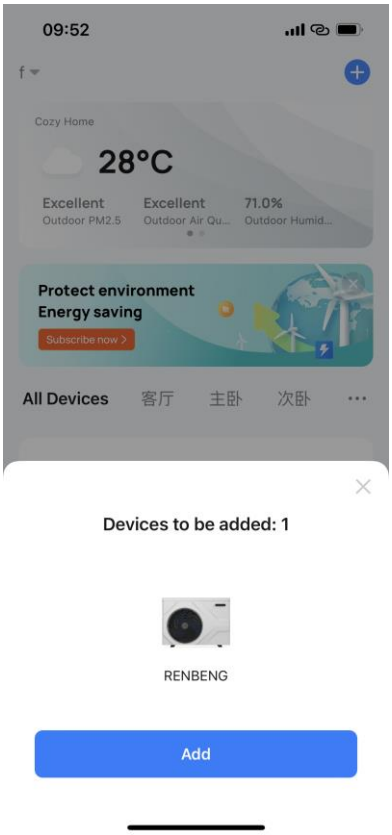

5. Enter the WIFI account and password that connected to the mobile phone, click “Next”.

6. The device automatically configures the network and is added successfully.

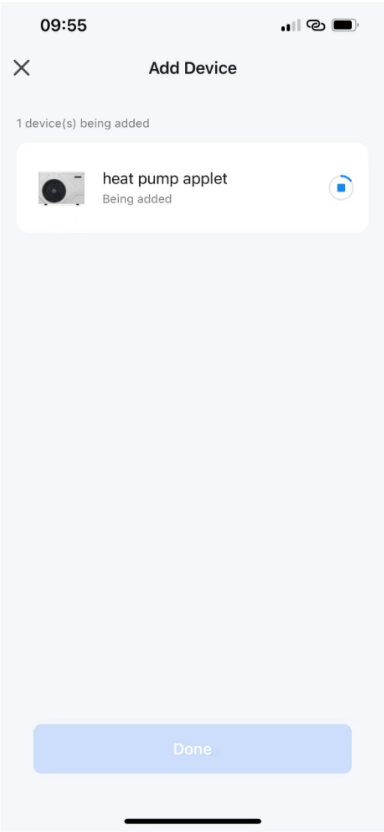

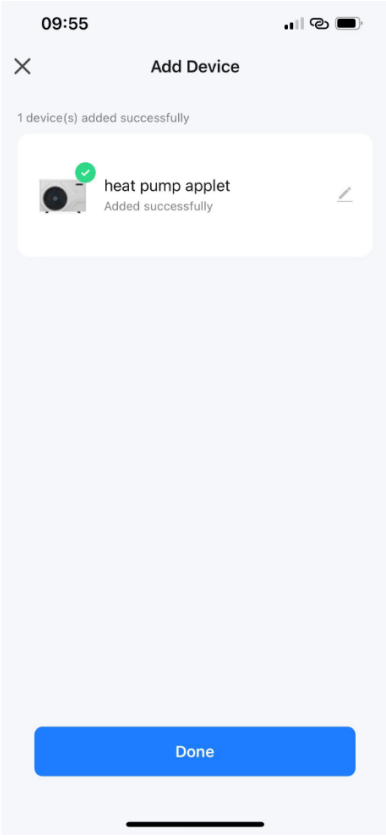

7. After the device is added, select the device on the home page to control the heat pump.

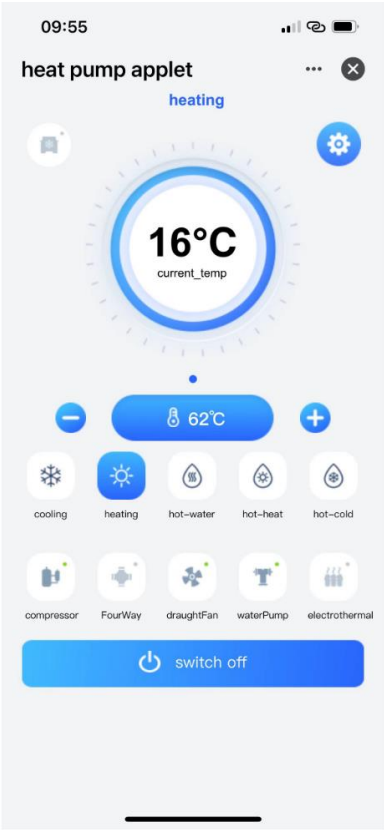

❖ Dry contact

The dry contact should be short-circuited when not in use. Otherwise, the controller will fail in heating/cooling mode.

When the dry contact is connected to a thermostat, in heating/cooling mode, the unit will stop or startup

according to the signal of the thermostat.

If the thermostat is a live device, installing a relay is required. Otherwise, it will burn out the PCB.

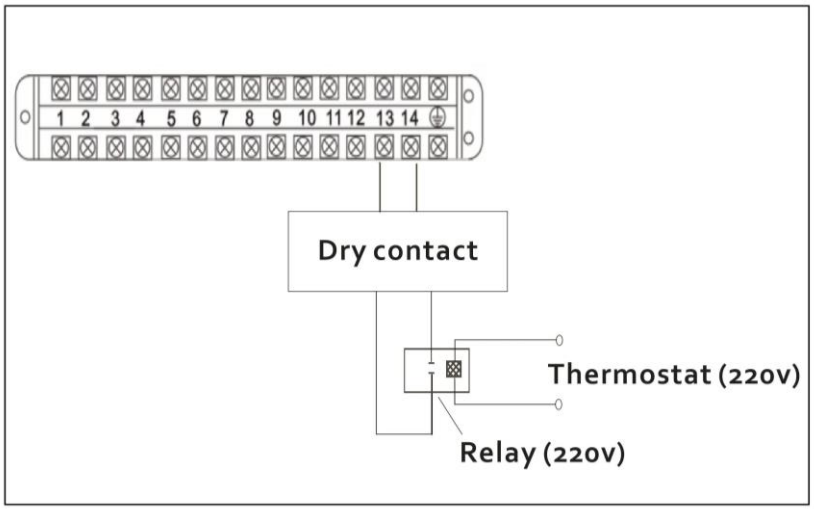

❖ **Anti-legionella function**

When connect the E-heater in DHW water tank to the Anti-legionella signal port, installing an AC contactor is required. Otherwise, it will burn out the PCB.

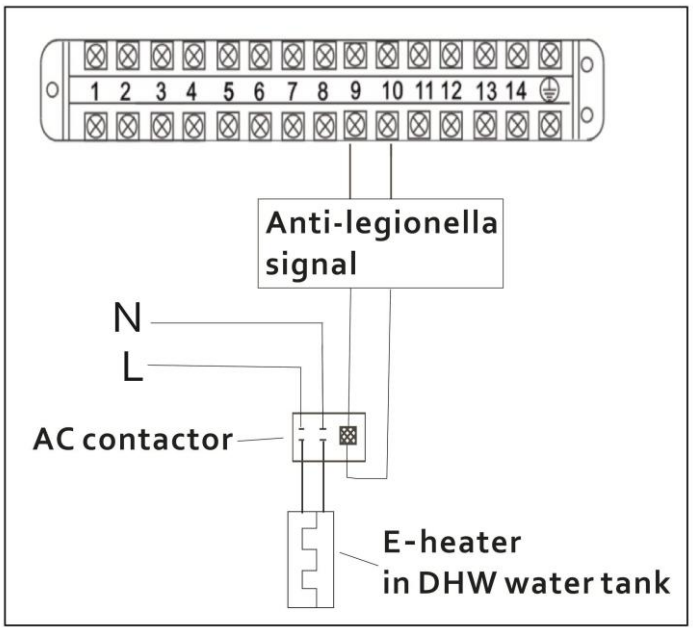

Parameter	Description	Default value	Unit	Range	Remark
27	Anti-legionella Cycle	144	h	0~9999	When set to 0, this function is not available
28	Water temp. of anti-legionella	70	℃	1~99	

❖ **Cascade operation**

Multiple heat pumps can be connected to work in cascade, maximum can be 8 units, the master unit controls all slave units.

1. Take the controller (of all machines) out from port CN16 on PCB. Connect **signal wire** to CN16.
2. Set master and slave units address

   When several units work in series, every unit must be set address by switch bit (SW1) on PCB as following form.

Bit switch	Unit address						
	#1(master)	#2(slave)	#3(slave)	#4(slave)	#5(slave)	#6(slave)	#7(slave)
1	ON	OFF	OFF	OFF	ON	OFF	OFF
2	OFF	ON	OFF	OFF	OFF	ON	OFF
3	OFF	OFF	ON	OFF	OFF	OFF	ON
4	OFF	OFF	OFF	ON	ON	ON	ON

3. Use signal cable to connect to work in PCB board, each unit is equipped with a 5-meter cable.

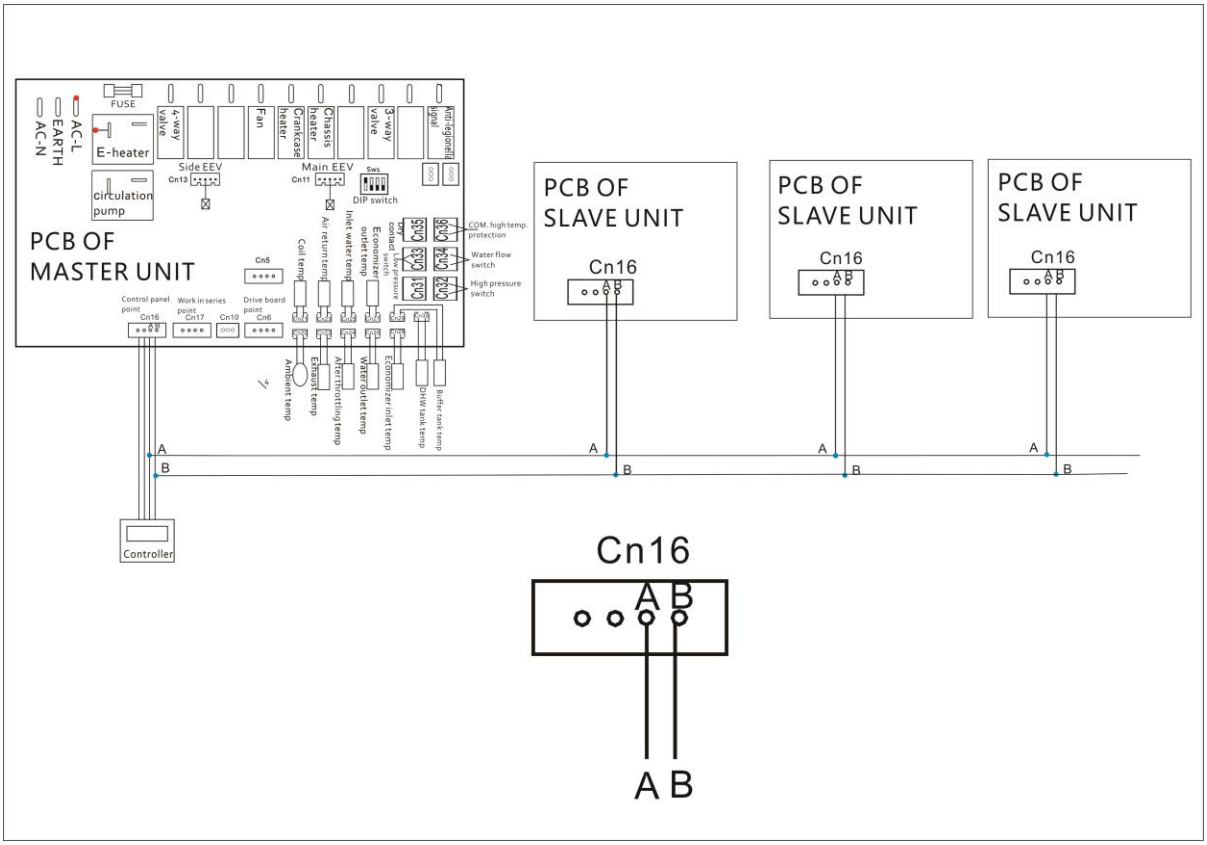

4. After connecting cables, set cascade quantities of heat pumps in parameter 55 by control panel.
5. Check status of every unit by selecting on parameter 56. For example, if want to check the parameter of slave 2, set parameter 56=2

❖ **SG ready**

1. Connector on PCB

   CN7 is for EUV signal of the power grid. CN8 is for SG signal of the power grid.

2. Parameters

Parameter	Description	Default value	Unit	Range	Remark
69	Controlled by city power grid or not	0		0-1	0: Uncontrolled 1: Controlled
70	During peak electricity demand, the allowable heat pump operating time can be set after stop running 2 hours	60	min	3~240	
71	Setting temperature in DHW mode during free electricity	54	℃	20~55	
72	Setting temperature of heating mode during free electricity	72	℃	15~75	

3. SG READY control

When parameter 69 set to 1, the heat pump can receive input signal from power grid.

Operation mode	EUV (CN7)	SG (CN8)	Description
Mode 1	1	0	Switch off heat pump for 120 mins, and switch on heat pump for (parameter 70) mins. Repeat this cycle.
Mode 2	0	0	Switch on heat pump for 115 mins, and switch off for 10 mins. Repeat this cycle.
Mode 3	0	1	Switch on until reach (parameter 71) at DHW mode, (parameter 72) at Heating mode. Auxiliary heating isn't allowed to be turned on.
Mode 4	1	1	Switch on until reach (parameter 71) at DHW mode, (parameter 72) at Heating mode. Auxiliary heating is allowed to be turned on.

Remarks: 1 is ON, 0 is OFF.

Part IV Maintenance

Before performing any maintenance on the unit, you should turn the unit off first and shut off the power.

A well-maintained heat pump could save your energy costs and make the unit durable, but must be done by a qualified technician. Below are some tips for your reference to help your heat pump gives you optimum performance.

1. Turn the power off when the unit is being maintained.
2. Do not use petrol, naphtha, dissolvent and any other chemicals on the unit, otherwise, it may damage the surface. External heat pump parts can be wiped with a damp cloth and domestic cleaner.
3. Avoid leaning or putting objects on the device.
4. Keep dry and drafty round the unit. Clean heat exchangers regularly (usually once per 1～2 months) to keep a good heat exchange efficiency.
5. If the unit will be shut down for a long time, you should drain the water in the pipe, turn the power off and cover it with protective cover, check it roundly before you start it again.
6. It is advised to use the phosphoric acid whose temperature is about 50～60℃ and consistency is 15% to clean the heat exchanger of the unit. First start the circulation pump to clean it for 3 hours, and then flush it with tap water for three times. Do not use any amyctic detergent to clean the heat exchanger and the tank.
7. Change the installation place

   If the customer wants to change the site, please contact with the dealer or the local Customer Service for help.

8. Cleaning and maintenance

   Regular maintenance is essential to ensure optimal use of the unit. Doing maintenance the wrong way can reduce the performance of the unit and shorten the life of the system.

   The frequency of regular maintenance should be guaranteed at least 1 time/year.

   To be safe, the unit must be shut down and the power supply must be shut off, before cleaning.

   If necessary, the temperature sensor can be dismounted before the unit is cleaned, But it must be installed

   back after the cleaning is finished.

9. External maintenance

   Check around the heat pump unit regularly to make sure the inlet grille is not blocked by leaves, snow or other things;

   at least once a year to clean the heat exchanger inlet grille, if the unit is located in dirty environment, need to be cleaned often to ensure that the unit runs well. Make sure that there is not too much frost or snow covering the heat pump unit in colder times;

   Regularly check the unit for loose, damaged or broken parts, if there is and not eliminate these hidden dangers, the unit may cause injury and loss of personal, goods and property.

   Regularly check the water circuit system for leaks, if there are leaks, they should be repaired immediately; Regularly check the refrigerant circuit for leakage, if there is any leakage, the refrigerant recovery equipment should be applied to recover the remaining refrigerant the system, repair and re-test it before filling it into the unit.

Part V Trouble Shooting

Type	Code	Description	Remark
Failure	F0	Communication failure between main PCB and driver board	1. The signal cable between PCB and driver board is open circuit, short circuit or wrong line sequence. Repair or replace the signal line. 2. The PCB is damaged. Replace it. 3. The drive board is damaged. Replace it.
	F1	Communication failure between controller and main PCB	1. The signal line between controller and PCB is open circuit, short circuit or wrong line sequence. Repair or replace the signal line. 2. There is interference near the unit. Remove the interference or change a installation site. 2. The controller is damaged. Replace it. 3. The PCB is damaged. Replace it.
	F2	Abnormal start of compressor (Open-phase, phase stagger)	1. Phase stagger of the compressor leads, two phases of them are exchanged. 2. Open-phase of the compressor leads. Reconnect them. 3. The drive board is damaged. Replace it.
	F3	Out of step of compressor	1. Poor connection of compressor leads. Reconnect them. 2. The drive board is damaged. Replace it.
	F4	IPM module failure	1.Poor heat dissipation of aluminum radiator 2.The drive board is damaged. Replace it.
	F6	Outdoor DC fan failure	1. Power cables not connected properly 2.The outdoor DC fan is damaged. Replace it. 3. The drive board is damaged. Replace it.
	E0	Inlet water temp sensor failure	1. The sensor isn’t connected well. Reconnect it. 2. The sensor is damaged. Replace it. 3. The PCB is damaged. Replace it.
	E1	Outlet temp sensor failure	1. The sensor isn’t connected well. Reconnect it. 2. The sensor is damaged. Replace it. 3. The PCB is damaged. Replace it.
	E2	After throttling temp sensor failure	1. The sensor isn’t connected well. Reconnect it. 2. The sensor is damaged. Replace it. 3. The PCB is damaged. Replace it.

	E3	Air suction temp sensor failure	1. The sensor isn't connected well. Reconnect it. 2. The sensor is damaged. Replace it. 3. The PCB is damaged. Replace it.
	E4	Outdoor coil temp sensor failure	1. The sensor isn't connected well. Reconnect it. 2. The sensor is damaged. Replace it. 3. The PCB is damaged. Replace it.
	E5	Outdoor environment temp sensor failure	1. The sensor isn't connected well. Reconnect it. 2. The sensor is damaged. Replace it. 3. The PCB is damaged. Replace it.
	E6	Exhaust temp sensor failure	1. The sensor isn't connected well. Reconnect it. 2. The sensor is damaged. Replace it. 3. The PCB is damaged. Replace it.
	E7	EVI return circuit air return temp sensor failure	1. The sensor isn't connected well. Reconnect it. 2. The sensor is damaged. Replace it. 3. The PCB is damaged. Replace it.
	EA	Economizer inlet temp sensor failure	1. The sensor isn't connected well. Reconnect it. 2. The sensor is damaged. Replace it. 3. The PCB is damaged. Replace it.
	EB	Indoor environment temp sensor failure	1. The sensor isn't connected well. Reconnect it. 2. The sensor is damaged. Replace it. 3. The PCB is damaged. Replace it.
	EC	Economizer outlet temp sensor failure	1. The sensor isn't connected well. Reconnect it. 2. The sensor is damaged. Replace it. 3. The PCB is damaged. Replace it.
	ED	Buffer tank sensor failure	1. The sensor isn't connected well. Reconnect it. 2. The sensor is damaged. Replace it. 3. The PCB is damaged. Replace it.
	EH	DHW water tank sensor failure	1. The sensor isn't connected well. Reconnect it. 2. The sensor is damaged. Replace it. 3. The PCB is damaged. Replace it.
	EE	Main board EE failure	1. The software of the PCB isn't matched. 2. The PCB is damaged. Replace it.
	EF	Driver board EE failure	1. The software of the drive board isn't matched. 2. The drive board is damaged. Replace it.

Protection1 (Display on screen)	P7	High pressure switch protection	1. Insufficient water flow: a. The water piping is blocked. Check the water piping and clean the Y-type filter. b. There is air in water pipes. Vacuumize it. c. The power of circulation pump is insufficient. Change to a bigger one. d. Scaling of heat exchanger. Clean heat exchanger 2. The high pressure switch is damaged. Replace it. 3. The fluorine system is blocked. Fix it. 4. The PCB is damaged. Replace it.
	P8	Low pressure switch protection	1. Refrigerant leakage. Check leakage and repair, vacuumize it and charge refrigerant according to rated label. 2. The refrigerant is insufficient. Charge refrigerant according to rated label. 3. The low pressure switch is damaged. Replace it. 4. The electronic expansion valve is damaged. Replace electronic expansion valve. 5. The surface of the evaporator is dirty. Clean the evaporator. 6. The fan motor is damaged. Replace the fan motor. 7. The PCB is damaged. Replace it.
	PC	Water flow switch protection	1. Check the water flow switch is reliably connected. 2. There's air in water inlet pipes. Open the exhaust port of the circulating pump for vacuum. 3. The water flow switch is damaged. Replace it. 4. The water flow is insufficient. Clean the Y-type filter and ensure that the circulation pipeline is smooth. 5. If the circulating pump does not work, check if the power output of the circulating pump on PCB is normal or not. 6. The circulation pump is damaged. Repair or replace it. 7. The PCB is damaged. Replace it.
	PU	DC circulation pump failure	1. Circulation pump control signal cable is loose. 2. Circulation pump is damaged.
	H1	Temperature difference between water inlet and water outlet is too big	1. Insufficient water flow: a. The water piping is blocked. Check the water piping and clean the Y-type filter.

			b. There is air in the water piping. Vacuumize it. c. The power of circulation pump is insufficient. Change to a larger one. d. The circulating pump is damaged. Repair or replace it. 2. The temperature sensor falls off or is damaged. Re-fix or replace the temperature sensor.
Protection2 (Check in the background)	F5	Overheat protection of compressor	1. Check if the refrigerant is sufficient. Check for leakage, and replenish refrigerant. 2. The protection switch is damaged. Replace it. 3. The PCB is damaged. Replace it.
	P1	AC current protection of outdoor unit	1. The fan is damaged. Replace it. 2. The drive board is damaged. Replace it.
	P2	Current protection of compressor	1. Open-phase of the compressor leads. Reconnect them. 2. The drive board is damaged. Replace it.
	P3	AC voltage too high / too low protection of outdoor unit	1. Check the power supply. 2. The drive board is damaged. Replace it.
	P4	DC bus voltage too high / too low protection	1. Check the power supply. 2. The drive board is damaged. Replace it.
	P5	IPM overheat protection	1. Poor ventilation of the heatsink of drive board. 2. The drive board is damaged. Replace it.
	P6	Overheat protection of exhaust temperature	1. Compressor overheat protection. Check if the refrigerant is sufficient. Check for leakage, and replenish refrigerant. 2. The exhaust temperature sensor is damaged. Replace it. 3. The PCB is damaged. Replace it.
	P9	Overheat protection of outer coil in cooling	1. The air intake of the evaporator is blocked. 2. The fan doesn’t work or the speed is slow, check the fan motor or driver board. 3. The coil temperature sensor is damaged. Replace it. 4. 3. The PCB is damaged. Replace it.
	PH	Environment temperature is too high in heating	1. The ambient temperature is higher than the protection setting value. 2. The ambient temperature sensor is damaged. Replace it. 3. The PCB is damaged. Replace it.

	PL	Environment temperature is too low in cooling	1. Ambient temperature is lower than 0℃ when cooling. 2. The ambient temperature sensor is damaged. Replace it. 3. The PCB is damaged. Replace it.

The possible reasons and treatment of common failure.

Fault Condition	Possible Causes	Treatment
The unit doesn't work	◇Power fault ◇Bad connection to the power ◇Fuse blow	◇Turn off the switch, check the Power source ◇Find the causes and renovate them ◇Replace the fuse
The pump is working but too noisy and the water is not cycled	◇Lack water In the system ◇There is air in the water circulation ◇Any valve in the system is not open ◇Filter stoppage	◇Check the water make-up device and fill in with water ◇Discharge the air in water system ◇Open all valves ◇Clean filters
Low heating capacity	◇Inadequate refrigerant ◇bad insulation of the water system ◇Drying filter stoppage ◇Air side heat exchanger is un-efficient ◇Inadequate water-flow	◇Leak hunting and fill in standard quantity of refrigerant ◇Improve the heat insulation ◇Replace the drying filter ◇Clean the heat exchanger ◇Clean the water filter
The compressor doesn't work	◇Power failure ◇Compressor contactor destroyed ◇Poor connection ◇Overheating protection ◇water outlet temperature is too high ◇Inadequate water-flow	◇Check it and solve the problems ◇Replace contactor ◇Check and renovate it ◇Check and solve the problems ◇Reset a proper temperature ◇Clean the water filter and discharge the air in the water system
The compressor works but too noisy	◇Liquid refrigerant goes into the compressor ◇interior components destroyed ◇Inadequate refrigeration oil	◇Check the expansion valve ◇Replace the compressor ◇Add in adequate refrigeration oil
The fan doesn't work	◇Capacitor damaged ◇The fans are not fixed well ◇The electromotor burned out ◇Contactor destroyed	◇Replace it ◇Fix it well again ◇Replace the electromotor ◇Replace the Contactor

Compressor works but not heating	◇Refrigerant leakage ◇Compressor fault	◇Leak hunting and fill in standard quantity of refrigerant ◇Replace the compressor
Low water-flow protection	◇Hydraulic switch destroyed ◇Inadequate water-flow	◇Replace the switch ◇Clean the filter and discharge the air
Excessive discharge pressure	◇Too much refrigerant ◇Non-condensable gas in the Refrigeration cycle ◇Inadequate water-flow	◇Draw off the superfluous refrigerant ◇Drive the gas out ◇Check the circulation and increase the flow
Low suction pressure	◇Drying filter stoppage ◇Lack of refrigerant ◇Excessive pressure drop in the heat exchanger	◇Replace the filter ◇Leak hunting and fill in standard quantity of refrigerant ◇Check the opening of electronic expansion valve

Part VI Wiring Diagram

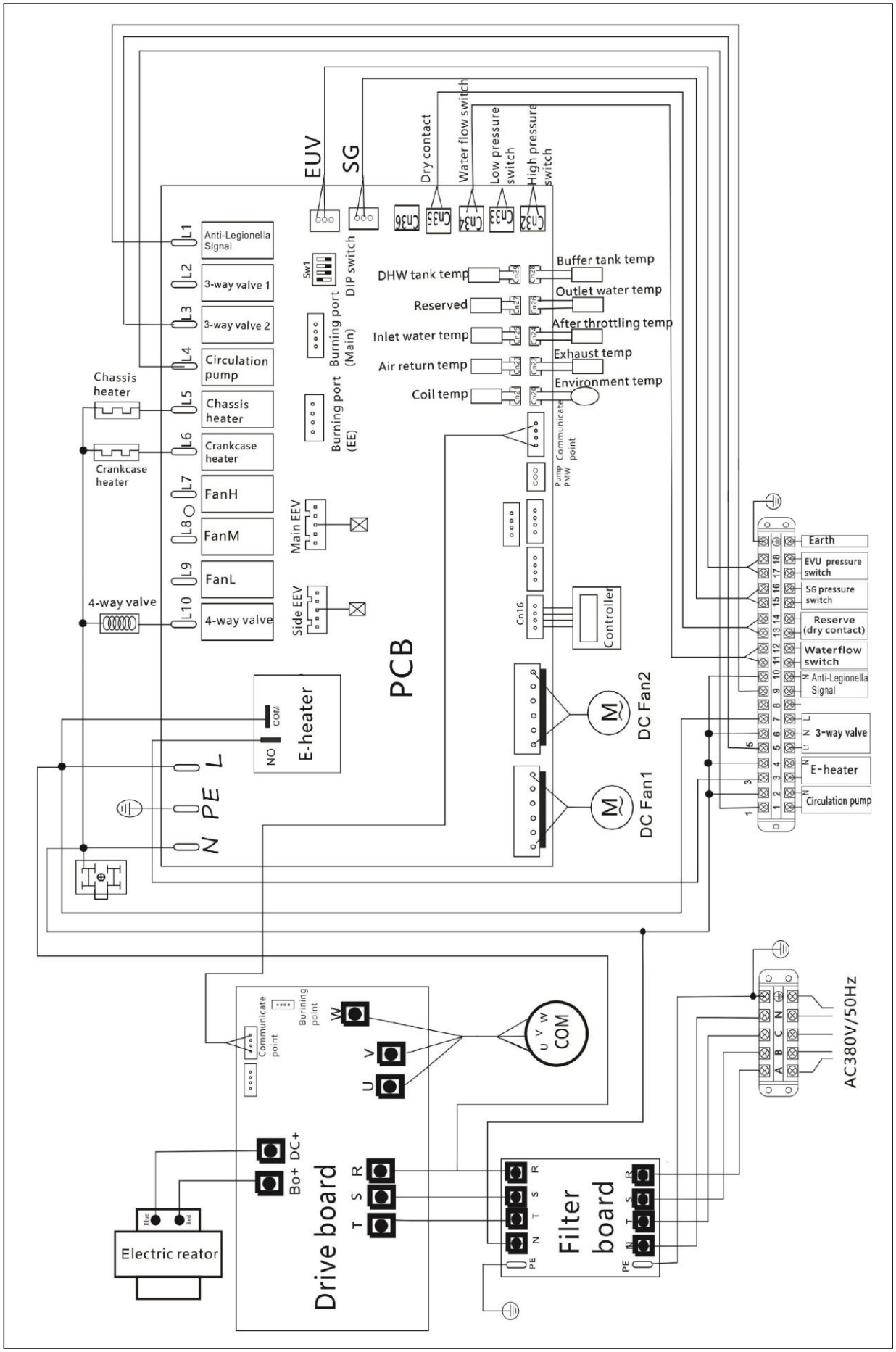

Disposal

Do not dispose this product as unsorted municipal waste. Collection of such waste separately for special treatment is necessary.

Do not dispose of electrical appliances as unsorted municipal waste, use separate collection facilities.

Contact your local government for information regarding the collection systems available. If electrical appliances are disposed of in landfills or dumps, hazardous substances can leak into the groundwater and get into the food chain, damaging you health and well-being.

There won’t be a further notice if anything changes as the unit improved.
If there is anything difference with rating label, please subject to the rating label on the unit.